Docusign Envelope ID: 07D426A8-D8D2-43AA-A1A2-8909B8E4A602

WOOD DESTROYING PESTS AND ORGANISMS INSPECTION REPORT

BUILDING NO.	STREET, CITY, STATE, ZIP	Date of Inspection	No. of Pages
1731	Mountain Blvd, Oakland CA 94611	3/21/2026	15

2450 Armstrong Street
Livermore, CA 94551
Tel: (925) 579-2927
Email: office@brothersinspections.com
www.brothersinspections.com

Firm Registration No. PR 7778	Report No. 27510	Escrow No.
Ordered By: Frazzano Tse Team 760 Camino Ramon Suite 200 Danville, CA 94526 Attn: Alex Tse (925) 788-1432	Property Owner/Party of Interest Kyle & Suzanne Peacock 1731 Mountain Blvd Oakland, CA 94611	Report Sent To: Frazzano Tse Team 760 Camino Ramon Suite 200 Danville, CA 94526 Attn: Alex Tse (925) 788-1432

COMPLETE REPORT ☒ LIMITED REPORT ☐ SUPPLEMENTAL REPORT ☐ REINSPECTION REPORT ☐

General Description:
Vacant, one story single family home with stucco and wood siding exterior.

Inspection Tag Posted:
Garage

Other Tags Posted:
None noted

An inspection has been made to the structure(s) shown on the diagram in accordance with the Structural Pest Control Act. Detached porches, detached steps, detached decks and any other structures not on the diagram were not inspected.

Subterranean Termites ☐ Drywood Termites ☐ Fungus/Dryrot ☒ Other Findings ☒ Further Inspection ☒
If any of above boxes are checked, it indicates that there were visible problems in accessible areas. Read the report for details on checked items.

Signed by: 7EEB7B3B666841D... 3/24/2026

Signed by: Suzanne M Peacock 7F8CFDBC33E949F... 3/25/2026

NOTE: DIAGRAM IS DISPLAYED ON PAGE 2

Inspected by William Martinez State License No. FR56061 Signature

You are entitled to obtain copies of all reports and completion notices on this property reported to the Structural Pest Control Board during the preceeding two years. To obtain copies contact: Structural Pest Control Board, 2005 Evergreen Street, Suite 1500, Sacramento, California 95815.

NOTE: Questions or problems concerning the above report should be directed to the manager of the company. Unresolved questions or problems with services performed may be directed to the Structural Pest Control board at (916) 561-8708, or (800) 737-8188 or www.pestboard.ca.gov.

Docusign Envelope ID: 07D426A8-D8D2-43AA-A1A2-8909B8E4A602

BUILDING NO.	STREET, CITY, STATE, ZIP	INSPECTION DATE	REPORT NO.
1731	Mountain Blvd, Oakland CA 94611	3/21/2026	27510

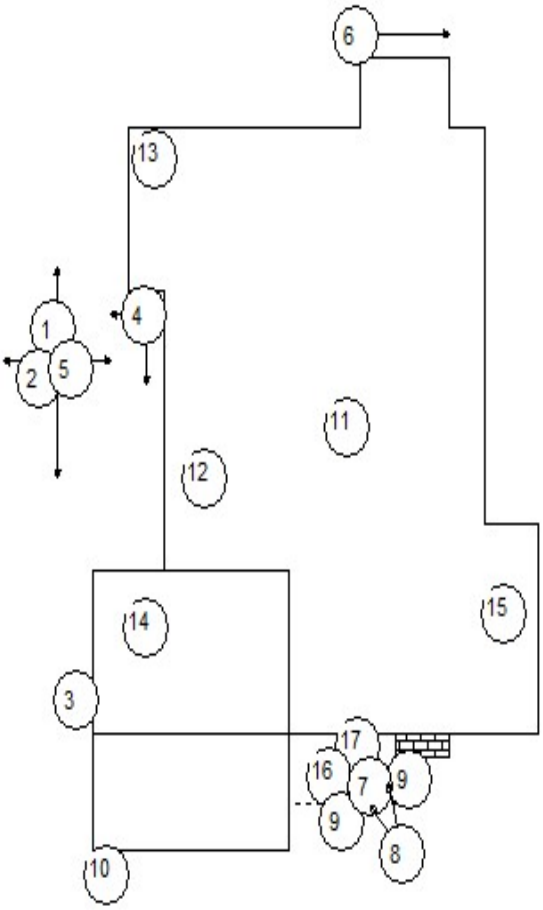

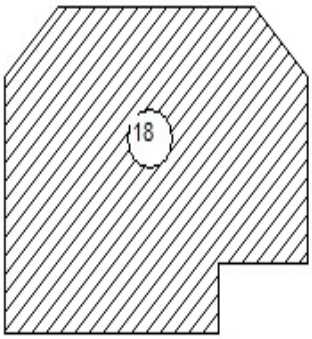

Docusign Envelope ID: 07D426A8-D8D2-43AA-A1A2-8909B8E4A602

1731	Mountain Blvd, Oakland CA 94611	3/21/2026	27510
BUILDING NO.	STREET, CITY, STATE, ZIP	INSPECTION DATE	REPORT NO.

THIS IS A STRUCTURAL PEST CONTROL REPORT: NOT A BUILDING INSPECTION REPORT. THEREFORE, NO OPINION IS BEING RENDERED REGARDING THE STRUCTURAL INTEGRITY OF THIS BUILDING.

IMPORTANT INFORMATION FOR ALL INTERESTED PARTIES TO READ

A Wood Destroying Pest & Organism Inspection Report contains findings as to the presence or absence of evidence of wood destroying insects or organisms in visible and accessible areas on the date of inspection, and contains recommendations for correcting any infestation, infections, or conditions found. The contents of Wood Destroying Pest & Organism Inspection Reports are governed by the Structural Pest Control Act and its rules and regulations.

The Structural Pest Control Act requires inspection of only those areas which are visible and accessible at the time of inspection. Some areas of the structure are not accessible to inspect, such as inaccessible attics or portions thereof; the interior of hollow walls; spaces between a floor or porch deck and the ceiling or soffit below; such structural segments as enclosed bay windows, buttresses, and similar areas to which there is no access without defacing or tearing out lumber, masonry or finished work; built in cabinet work; floors beneath coverings, areas where storage conditions, furnished interiors or locks make inspection impracticable. These areas will be inspected if they are made accessible by the owner at his expense.

NOTE: It is not economically feasible to open and check the areas mentioned above and similar enclosed conditions. These areas are excluded from this report. Also, detached wooden fences, garden trellises, and similar detached appetencies **are not** part of this report. This inspection covers the structure indicated on the diagram.

The exterior surface of the roof **will not** be inspected. If you want the water tightness of the roof determined, you should contact a roofing contractor who is licensed by the Contractors State License Board.

Mold Inspection Disclaimer

Please note that our inspection **does not include testing for or identification of mold, mildew, or other biological contaminants**. Mold inspection and testing require specialized training and equipment beyond the scope of this standard property inspection.If you have concerns about possible mold or indoor air quality issues, we strongly recommend consulting a licensed mold assessor or environmental specialist.We make no representations or warranties regarding the presence, absence, or potential for mold or moisture-related conditions in the property. The client assumes full responsibility for seeking additional evaluations if mold is a concern.

Rodent Disclaimer

Please note that our inspection and treatment services **do not include the detection, inspection, or evaluation of rodent activity**, including but not limited to rats, mice, or other mammals.We do not inspect for rodent entry points, droppings, nesting sites, or structural damage caused by rodents. If there are concerns about rodent presence or infestation, we recommend consulting a licensed rodent or wildlife control specialist for further evaluation and mitigation.Our findings and treatments are limited strictly to the pest species and areas specifically identified in our service agreement. No representation is made regarding the presence or absence of rodents unless explicitly stated in writing.

NOTE: We do not remove floor coverings at the time of our inspection. We assume no responsibility for any damage detected to any wood floors after the floor coverings have been removed. These areas will be inspected if they are made accessible prior to our inspection.

NOTE: All attics are inspected from the access hatch only. Insulation and lack of accessible areas make these areas inaccessible to inspect.

Docusign Envelope ID: 07D426A8-D8D2-43AA-A1A2-8909B8E4A602

NOTE: It is industry practice that the eaves, siding and trim above 11 feet are viewed from ground level only, as our inspectors **do not** carry extension ladders. If any further information is desired, we will return to the property with an extension ladder at an additional charge.

NOTICE: Reports on this structure prepared by various companies should list the same findings (i.e. termite infestation, termite damage, etc) however, recommendations to correct these findings may vary from company to company. You have right to seek a second opinion from another company.

When Work Is Recommended:
Brothers Inspections Services agrees to use all reasonable care in the performance of our work, but we cannot assume any responsibility should any damage occur to plumbing pipes, electrical pipes embedded in the ground or overhead, roof or other facilities, plants and shrubs, or for injuries or death of animals.

Pesticides are the products Brothers Inspections Services uses to control the target pests listed in your inspection. Pesticides make a better life for all of us. They help control disease carriers thus protecting your health and property. When properly used, pesticides pose no problem to man or the environment. Your Brothers Inspections Services Pest Control technician is a state-certified applicator and is constantly being upgraded by our training sessions. If you have any questions, please call the following number (925) 724-9433.

NOTE: It is recommended that building permits be obtained for all work requiring permits, prior to beginning the recommended repairs. For information concerning the building department and permit requirements, contact the local building department. Work performed as required under a permit from the building department should be approved, accepted and signed off by the department prior to considering such work to be completed. The building department may require installation of smoke/heat detectors as a condition for obtaining a building permit.

This company will re-inspect repairs done by others **within four (4) months** of our original inspection. A charge, if any, cannot be greater than the original inspection fee for each re-inspection. The re-inspection must be done within ten (10) working days of the request. The re-inspection is a visual inspection, and, if inspection of concealed areas is desired, inspection of work in progress will be necessary. Any guarantees must be received from parties performing repairs.

NOTE: The charge for services that this company subcontracts with another licensed company may include the company's charges for arranging and administering such services in addition to the direct costs associated with paying the sub-contractor. You may accept Brothers Inspections Services bid, or you may contract directly with another licensed company. Brothers Inspections Services will not be responsible for any act or omission in the performance of work that you directly contract with another to perform.

NOTE: If any infestation, infection or damage is discovered in a concealed area during the course of performing any recommendations on this report, or any remodel work, this company will file a supplemental report. This company is not responsible for controlling such infestation or infections nor is it responsible for controlling such damage. If the additional work is within the scope of this company's operation a cost will be provided with the supplemental report.

Docusign Envelope ID: 07D426A8-D8D2-43AA-A1A2-8909B8E4A602

- **During repairs, if scaffolding and/or scissor lift are required and necessary to complete the repairs, a supplemental report will be issued. The owner is responsible for scaffolding/scissor lift costs before work proceeds.**

- **Showers over ceilings are not water tested unless water stains are evident below. In which case, recommendations will be made for further inspection testing.**

- **The attics are only viewed from the access point. If there are walkable surfaces, we will enter the attic and inspect as many accessible areas as possible.**

- **Further inspection policy: All areas of the structure (i.e. garages, bedrooms, crawlspace, attic, etc.) must be accessible prior to inspection. If storage blocks accessibility a return trip fee of $85 will apply per supplemental report.**

- **The inspection fee is separate from repair cost and is due at the time of inspection.**

NOTE: THE DIAGRAM IN THIS REPORT IS NOT TO SCALE.

All payments are due upon completion of work. In the event an attorney is employed to enforce payment, the under-signed agrees to pay reasonable attorney fees and other costs of collection. Any balance after thirty (30) days will be subject to a 1.5% finance charge on the unpaid balance.

Under California Mechanics lien law, any structural pest control operator who contracts to do work for any contractor, subcontractor, laborer, supplier or their person who helps to improve your property, but has not paid for his work or supplies, has a right to enforce a claim against your property. This means that after a hearing, your property could be sold by a court officer, and the proceeds of the sale are used to satisfy the debt. This can happen even if you have paid your contractor in full, if the subcontractors, laborers, or suppliers remain unpaid. We reserve the right to file a claim or a lien against your property, certain claimants such as subcontractors or material suppliers are required to provide you with a document entitled “Preliminary Notice". General contractors and laborers for wages do not have to provide this notice. Preliminary notice is not a lien against the property. Its purpose is to notify you of persons who may have a right to file a lien against your property if they are not paid.

This is a separated report; it is defined as Section 1 and Section 2 conditions evident on the date of inspection.
SECTION 1: Contains items where evidence exists of active infestation, infection or condition that have resulted in or from infestation or infection.

SECTION 2: Contains items deemed likely to lead to infestation or infection, but where no visible evidence of such was found.

FURTHER INSPECTION: Contains items defined as recommendations to inspect area(s) which, during the original inspection, did not allow the inspector access to complete the inspection and cannot be defined as Section 1 or Section 2.

Thank you for calling Brothers Inspections Services. For any questions regarding this report, please contact our office at (925) 579-2927.

Docusign Envelope ID: 07D426A8-D8D2-43AA-A1A2-8909B8E4A602

BUILDING NO.	STREET, CITY, STATE, ZIP	INSPECTION DATE	REPORT NO.
1731	Mountain Blvd, Oakland CA 94611	3/21/2026	27510

1. FINDINGS AND RECOMMENDATIONS:

ITEM 1 FINDING: Noted minor exterior stucco cracks at the walls. No outward signs of moisture intrusion noted.

RECOMMENDATION: The owner should keep these cracks well sealed and maintained as a part of general home maintenance.
****** This is a Section 2 Item ****** OWNER

ITEM 2 FINDING: This structure was built without a weep screed. This was common building practice at the time of construction. No outward signs of any damage at this time.

RECOMMENDATION: The owner is advised to have periodic inspections of this area to determine if and when corrective work becomes necessary.
****** This is a Section 2 Item ****** OWNER

ITEM 3 FINDING: The soffit cover has been damaged by fungus at the area(s) indicated on the diagram.

RECOMMENDATION: Remove and replace all damaged wood members. If the damage is found to extend into an inaccessible area a supplemental report will be issued with any additional findings, recommendations and bids. Paint to match as close as possible.

NOTE: NO GUARANTEES ARE MADE ON COLOR MATCH.
****** This is a Section 1 Item ****** $ 400.00

ITEM 4 FINDING: The exterior of the structure was inaccessible for inspection due to heavy plant/shrub growth at the area(s) indicated on the diagram.

RECOMMENDATION: The owner is to cut back the plants/shrubs as necessary to allow for physical inspection of the exterior. Upon further inspection, a supplemental report will be issued with any additional findings, recommendations and bids.

NOTE: FURTHER INSPECTION TRIP FEE IS $95.
****** Unknown Further Inspection Recommended ****** OWNER

ITEM 5 FINDING: The roof soffit is not vented. No outward signs of leakage or damage at this time.

RECOMMENDATION: The owner should have periodic inspections. Upon request we will install vents to allow for proper air flow.
****** This is a Section 2 Item ****** OWNER

ITEM 6 FINDING: The roof eaves above the patio cover are inaccessible to inspect as there is no physical or visual access to inspect. No representations are made of the wood members that are in this area.

RECOMMENDATION: The owner is advised to monitor this area. Periodic inspections of the structure are recommended. Upon request we will attempt to further inspect this area. If it becomes necessary to perform an invasive inspection by removing any portion of the patio cover we will quote the cost to perform this method.
****** This is a Section 2 Item ****** OWNER

Docusign Envelope ID: 07D426A8-D8D2-43AA-A1A2-8909B8E4A602

BUILDING NO.	STREET, CITY, STATE, ZIP	INSPECTION DATE	REPORT NO.
1731	Mountain Blvd, Oakland CA 94611	3/21/2026	27510

1. FINDINGS AND RECOMMENDATIONS:

ITEM 7 FINDING: The front patio cover support post has been damaged by fungus at the area(s) indicated on the diagram.

RECOMMENDATION: Remove and replace all damaged wood members. If the damage is found to extend into an inaccessible area a supplemental report will be issued with any additional findings, recommendations and bids. Paint to match as close as possible.

NOTE: NO GUARANTEES ARE MADE ON COLOR MATCH.
****** This is a Section 1 Item ****** $ 1100.00

ITEM 8 FINDING: The front patio decorative fascia has been damaged by fungus at the area(s) indicated on the diagram.

RECOMMENDATION: Remove and replace all damaged wood members. If the damage is found to extend into an inaccessible area a supplemental report will be issued with any additional findings, recommendations and bids. Paint to match as close as possible.

NOTE: NO GUARANTEES ARE MADE ON COLOR MATCH.
****** This is a Section 1 Item ****** $ 900.00

ITEM 9 FINDING: The front patio cover support beams have been damaged by fungus at the area(s) indicated on the diagram.

RECOMMENDATION: Remove and replace all damaged wood members. If the damage is found to extend into an inaccessible area a supplemental report will be issued with any additional findings, recommendations and bids. Paint to match as close as possible.

NOTE: NO GUARANTEES ARE MADE ON COLOR MATCH.

NOTE: PATIO COVER WILL HAVE TO BE RE-SUPPORTED TO FACILITATE REPAIRS.
****** This is a Section 1 Item ****** $ 1500.00

ITEM 10 FINDING: Fungus damage was noted to the door jamb(s).

RECOMMENDATION: Remove the damaged jamb(s) and replace with new material as necessary. Paint to match.
****** This is a Section 1 Item ****** $ 325.00

ITEM 11 FINDING: Evidence of past or present roof leakage was observed.

RECOMMENDATION: The owner is advised to contact the appropriate tradesperson to evaluate and make any repairs deemed necessary.
****** This is a Section 2 Item ****** OWNER

ITEM 12 FINDING: Noted loose grout at the hall bathroom bathtub.

RECOMMENDATION: The owner should keep this area well sealed. If additional information is requested the owner is advised to contact the appropriate tradesperson.
****** This is a Section 2 Item ****** OWNER

BUILDING NO.	STREET, CITY, STATE, ZIP	INSPECTION DATE	REPORT NO.
1731	Mountain Blvd, Oakland CA 94611	3/21/2026	27510

1. FINDINGS AND RECOMMENDATIONS:

ITEM 13 FINDING: The back bedroom hardwood floor and underlayment have been damaged by fungus at the area(s) indicated on the diagram.

RECOMMENDATION: The owner is advised to contact the appropriate tradesperson to evaluate and make any repairs deemed necessary.
****** This is a Section 1 Item ****** OTHER TRADES

ITEM 14 FINDING: The area indicated on the diagram appears to be built over a slab or is built up on a sleeper floor making this area physically impossible to inspect. This was normal building practice at the time of construction.

RECOMMENDATION: The owner is to have periodic inspections of the surrounding area. If additional information is requested we will further inspect this area by cutting an access to allow for a more thorough visual inspection. Upon further inspection, a supplemental report will be issued with any additional findings, recommendations and bids.

NOTE: FURTHER INSPECTION TRIP FEE IS $95.
****** This is a Section 2 Item ****** OWNER

ITEM 15 FINDING: Cellulose debris (wood, paper products) with evidence of fungus was noted in the subarea.

RECOMMENDATION: Remove the cellulose debris of a rakeable size.
****** This is a Section 1 Item ****** $ 350.00

ITEM 16 FINDING: The front porch waterproof membrane has failed and fungus/dryrot is noted to the framing.

RECOMMENDATION: The owner is advised to contact the appropriate tradesperson to evaluate and make any repairs deemed necessary.
****** This is a Section 1 Item ****** OTHER TRADES

ITEM 17 FINDING: Evidence of wood boring beetles were noted at the wood members in the subarea.

RECOMMENDATION: Tarp and fumigate the structure with an approved fumigant. Mask over beetle holes as necessary.

NOTE: The structures must be vacated for five (5) days. A proper clearance must be issued by the fumigation company before anyone can enter. The owner is responsible to contact the local service company to restore gas to the property. All proper authorizations must be signed before the fumigation can be performed.
****** This is a Section 1 Item ****** PENDING

Docusign Envelope ID: 07D426A8-D8D2-43AA-A1A2-8909B8E4A602

BUILDING NO.	STREET, CITY, STATE, ZIP	INSPECTION DATE	REPORT NO.
1731	Mountain Blvd, Oakland CA 94611	3/21/2026	27510

1. FINDINGS AND RECOMMENDATIONS:

ITEM 18 FINDING: The area under the wooden deck is inaccessible for inspection due to lack of clearance. There is no outward indication of any wood damage. In order to comply with the Structural Pest Control Act, this deck would have to be accessible underneath.

RECOMMENDATION: Further inspection recommended by removing portions of the decking. Upon request, we will return to further inspect and issue a supplemental report with any additional findings, recommendations and bids.

NOTE: FURTHER INSPECTION TRIP FEE IS $95.

****** Unknown Further Inspection Recommended ****** OWNER

Docusign Envelope ID: 07D426A8-D8D2-43AA-A1A2-8909B8E4A602

1731	Mountain Blvd, Oakland CA 94611	3/21/2026	27510
BUILDING NO.	STREET, CITY, STATE, ZIP	INSPECTION DATE	REPORT NO.

OCCUPANTS CHEMICAL NOTICE

Brothers Inspections Services will use pesticide chemical(s) specified below for the control of wood destroying pests or organisms in locations identified in the Structural Pest Control report as indicated above.

(1) The pest(s) to be controlled:

___ SUBTERRANEAN TERMITES ___ DRYWOODS ___ FUNGUS **x**__ BEETLES ___CARPENTER BEES

(2) The pesticide(s) proposed to be used and the active ingredient(s).

X A. VIKANE GAS: Active ingredient:Sulfuryl Fluoride. Lethel gas (POISON)
___ B. CHLOROPICRIN: Used as warning agent with Vikane Gas Fumigant.
___ C. FUMITOXIN: Active ingredient: Aluminum Phosphide
___ D. TERMIDOR HE: Active ingredients: Fipronil:5-amino-1-(2,6-dichloro-4(triflouromethyl)phenyl)-4-((1,R,S)-(trifluoromethyl)sulfinyl)-1-H-pyrazole-3-carbonitrile.....8.73%
___ E. TENGARD: Active ingredients: Permethrin
___ F. TIMBOR: Active ingredients: (Disodium Octoborate Terahydrate)
___ G. INVADER HPX: Active ingredients: 2-(1Methylethorxy) Phenyl Methylcarbamate
___ H. DELTA DUST: Active Ingredient (s) 0.05% Deltamethrin

(3) "State Law requires that you be given the following information: CAUTION - PESTICIDES ARE TOXIC CHEMICALS. Structural Pest Control Companies are registered and regulated by the Structural Pest Control Board and apply pesticides which are registered and approved for use by the California Department of Pesticide Regulation and the U.S. Environmental Protection Agency. Registration is granted when the state finds that, based on existing scientific evidence, there are no appreciable risks if proper use conditions are followed or that the risks are outweighed by the benefits. The degree of risk depends upon the degree of exposure, so exposure should be minimized." "If within 24 hours following application you experience any of the following symptoms, contact your physician or poison control center and your pest control company immediately."

---- Nausea, vomiting, diarrhea, skin irritation, abdominal cramps, eye irritation, ringing in ears, excitability, difficulty breathing, lung irritation, respiratory irritation, pulmonary edema, fatigue, chest pain, dizziness, unconsciousness cyanosis, central nervous system effects.

---- Nausea, vomiting, diarrhea, skin irritation, nose & throat irritation, sweating, abdominal cramps, headache, eye irritation, excitability, shortness of breath, drowsiness, involuntary shaking, abdominal cramps, irritability, blurred vision.

For further information, contact any of the following:
Brothers Inspections Services.... (925) 724-9433
Alameda County Health Department.... (510) 567-6577
Contra Costa Health Department....(925) 370-5000

-Poison Control Center .....(800) 876-4766
-Alameda County Ag Department.....(925)551-5420
3575 Greenville Rd, Livermore, CA 94550
-Contra Costa County Ag Department.....(925)608-6600
1025 Escobar St, Martinez, CA 94553
-Structural Pest Control Board.....(916) 561-8700
2005 Evergreen Street, Suite #1500 Sacramento, CA 95815

Persons with respiratory or allergic conditions, or others who may be concerned about their health relative to this chemical treatment, should contact their physician concerning occupancy during and after chemical treatment prior to signing this NOTICE.

NO CHEMICAL APPLICATION WILL BE PERFORMED UNTIL SUCH TIME THAT THIS NOTICE IS RETURNED HAVING READ THE INSTRUCTIONS, I, THE UNDERSIGNED,WILL ACCEPT RESPONSIBILITY FOR ALL THE AFFOREMENTIONED.

_____
OWNER/OCCUPANT DATE

Docusign Envelope ID: 07D426A8-D8D2-43AA-A1A2-8909B8E4A602

11th

OCCUPANTS FUMIGATION NOTICE AND PESTICIDE DISCLOSURE

JOB ADDRESS: **1731 Mountain Blvd** **CITY:** **Oakland**

[X] Single Family Dwelling [ ] Multi Family Dwelling [ ] Other

Owner/Agent **Kyle & Suzanne Peacock, 1731 Mountain Blvd, Oakland CA 94611**

Tel. No. Emergency No.

Occupant **Kyle & Suzanne Peacock, 1731 Mountain Blvd, Oakland CA 94611**

Tel. No. Emergency No.

Prime Contractor **BROTHERS INSPECTIONS SERVICES** Emergency No. **Ph: (925) 724-9433**

Fumigation Contractor Emergency No.

Target Pests(s) [ ] Drywood Termites [X] Beetles [ ] Others(s)

Fumigants Proposed to be used: [ ] Methyl Bromide [X] Vikane (tm) (Active Ingredient = Sulfuryl Fluoride)

[ ] Other(s)

CHLOROPICRIN WILL BE USED AS WARNING AGENT WITH EITHER FUMIGANT

Dates of fumigation: Date changes/Alternate date:

Job Number: **27510** Initials:

Are you aware of any conduits, pipes, common drains, air ducts, central vacuum systems or any other construction elements that would allow the passage of a fumigant from the structure to be fumigated to any other adjacentor adjoining structure?

YES ( ) NO (**X**)

IMPORTANT - READ CAREFULLY

THIS BUILDING WILL BE FUMIGATED WITH LETHAL GASES ON THE DATES(S) INDICATED ABOVE. ALL PERSONS AND ANIMALS MUST VACATE THE PREMISES ON OR BEFORE ARRIVAL OF THE FUMIGATION CREW.

UNDER NO CIRCUMSTANCES CAN ANYONE ENTER THE BUILDING UNTIL THE FUMIGATION COMPANY'S NOTICE IS POSTED GIVING THE TIME AND DATE FOR SAFE RE-ENTRY.

"State law requires that you be given the following information: CAUTION PESTICIDES ARE TOXIC CHEMICALS. Structural pest control companies are registered and regulated by the Structural Pest Control Board, and apply pesticides which are registered and approved for use by the California Department of Pesticide Regulation and the United States Environmental Protection Agency. Registration is granted when the State finds that based on existing scientific evidence there are no appreciable risks if proper use conditions are followed or that the risks are outweighed by the benefits. The degree of risk depends upon the degree of exposure, so exposure should be minimized.

If within 24 hours you experience symptoms of dizziness, headache, nausea, reduced awareness, slowed movement, garbled speech or difficulty in breathing, leave the structure immediately and seek medical attention by contacting your physician or Poison Control Center (1-800-222-1222) and notify your pest control company. The warning agent, chloropicrin, can cause symptoms of tearing, respiratory distress and vomiting. Entry into the space during fumigation can be fatal.

For further information, contact any of the following: For your Health Questions - the County Health Department (phone see below); for Application Information the County Agricultural Commissioner (phone see below); for poison center (phone see below); and for Regulatory Information - the Structural Pest Control Board, 800/737-8188, 2005 Evergreen Street, Suite 1500, Sacramento, CA 95815.

FOR HEALTH QUESTIONS:

COUNTY HEALTH DEPARTMENT	COUNTY AGRICULTURAL COMMISSIONER	POISON CONTROL CENTER	STRUCTURAL PEST CONTROL BOARD
PHONE # **510-267-8000**	PHONE # **925-551-5420**	PHONE # **800-876-4766**	PHONE # **916-561-8700**

(For any other questions or issues please contact either the Prime or Fumigation Contractor listed above.)

I hereby acknowledge receipt of a copy of this document as well as a list that includes the instructions for the necessary preparations for the fumigation, procedures for leaving the structure, and the following documents.

NOTICE TO OWNER

[ ] Owner/Agent (signature) Date

[ ] Occupant(s) (signature)

We suggest that you notify nearby neighbors of the date of fumigation and to keep pets away during the fumigation. Close off any open access to the subarea to prevent pets from entering.

Close off any open access to the subarea to prevent pets from entering.

43M-48 (Rev. 5/07)

Docusign Envelope ID: 07D426A8-D8D2-43AA-A1A2-8909B8E4A602

BUILDING NO.	STREET, CITY, STATE, ZIP	INSPECTION DATE	REPORT NO.
1731	Mountain Blvd, Oakland CA 94611	3/21/2026	27510

ITEM 3

ITEM 8

ITEM 7

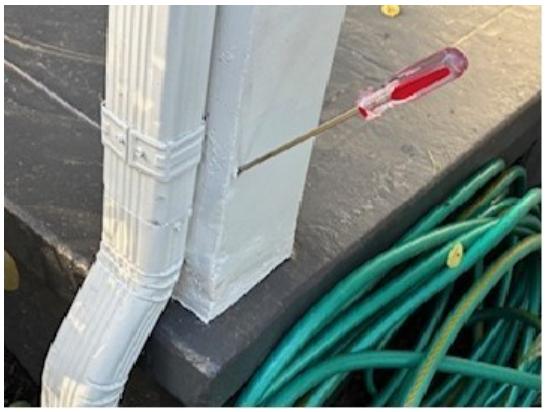

ITEM 9

ITEM 8

ITEM 7, 8, 9

ITEM 7, 8, 9

ITEM 11

ITEM 7, 8, 9

ITEM 12

ITEM 10

ITEM 13

Docusign Envelope ID: 07D426A8-D8D2-43AA-A1A2-8909B8E4A602

BUILDING NO.	STREET, CITY, STATE, ZIP	INSPECTION DATE	REPORT NO.
1731	Mountain Blvd, Oakland CA 94611	3/21/2026	27510

ITEM 15

ITEM 16, 17

ITEM 16, 17

ITEM 16, 17

ITEM 16, 17

ITEM 16, 17

Docusign Envelope ID: 07D426A8-D8D2-43AA-A1A2-8909B8E4A602

ITEM 16, 17

ITEM 16, 17

Docusign Envelope ID: 07D426A8-D8D2-43AA-A1A2-8909B8E4A602

2450 Armstrong Street
Livermore, CA 94551
Tel: (925) 579-2927
Email: office@brothersinspections.com
www.brothersinspections.com

WORK AUTHORIZATION CONTRACT

Address of Property: 1731 Mountain Blvd, Oakland CA 94611
Inspection Date: 3/21/2026
Report #: 27510
Title Co. & Escrow #:

SECTION 1		SECTION 2		FURTHER INSPECTION	
3	$ 400.00	1	OWNER	4	OWNER
7	$ 1100.00	2	OWNER	18	OWNER
8	$ 900.00	5	OWNER		
9	$ 1500.00	6	OWNER		
10	$ 325.00	11	OWNER		
13	OTHER TRADES	12	OWNER		
15	$ 350.00	14	OWNER		
16	OTHER TRADES				
17	PENDING				

We Authorized the Following Section 1 Items to be Performed.
3,7,8,9,10,13,15,16,17

We Authorized the Following Section 2 Items to be Performed.
1,2,5,6,11,12,14

We Authorized the Following Items for Further Inspection.
4,18

Proposed Cost Section 1: $4,575.00
Proposed Cost Section 2: $0.00
Total: $4,575.00
Proposed Cost Fur.Insp.: $0.00

NOTICE TO OWNERS: Under California Mechanics Lien Law any structural pest control company which contracts to do work for youany contractor, subcontractor, laborer, supplier or other person who helps to improve your property but is not paid for his orher work or supplies has a right to enforce a claim against your property. This means that, after a court hearing, yourproperty could be sold by the court officer and the proceeds of the sale used to satisfy the indebtedness. This can happeneven if you have paid your structural pest control company in full, if the subcontractor, laborer, or supplier remains unpaid.To preserve their right to file a claim or lien against your property, certain claimants such as contractors or materialsuppliers are required to provide you with a document entitled "Preliminary Notice." A Preliminary Notice is not a lienagainst your property. Its purpose is to notify you of persons who may have a right to file a lien against your property ifthey are not paid.

I have read this work authorization contract and WDO inpection report it refers to.
SIGNED WORK AUTHORIZATION CONTRACT MUST BE RECEIVED BEFORE WORK WILL BE SCHEDULED.
I have read and understand the terms of this work authorization contract and hereby agree to all

APPROVED AND READ BY: _____ **DATE** _____

ACCEPTED FOR: BROTHERS INSPECTIONS SERVICES _____ **DATE** _____

Docusign Envelope ID: 07D426A8-D8D2-43AA-A1A2-8909B8E4A602

2450 Armstrong Street
Livermore, CA 94551
Tel: (925) 579-2927
Email: office@brothersinspections.com
www.brothersinspections.com

WORK AUTHORIZATION CONTRACT

Address of Property: 1731 Mountain Blvd, Oakland CA 94611
Inspection Date: 3/21/2026
Report #: 27510
Title Co. & Escrow #:

CUSTOMER INFORMATION

The total amount of this contract is due and payable upon completion of the work listed above unless otherwise specified. Only the work specified in the contract is being done at this time due to owner's wishes. ANY WORK PERFORMED AGAINST AN EXISTING TITLE ESCROW WILL BE THE FINANCIAL RESPONSIBILITY OF THE PARTY ORDERING THE INSPECTION REPORT, IN THE EVENT OF A CANCELLED TITLE ESCROW.

Work completed (LABOR) by operator shall be guaranteed for a period of one year from completion. Toilet plumbing (parts supplied by this firm), showers, floors or any measures for the control of moisture are guaranteed for (30) days only. Chemical treats are guaranteed for one year. Only the areas treated are guaranteed.

Customer agrees to hold the company harmless for any damage which may occur to plant life, wiring, trees, vines, pets, tile roofs, plumbing leaks, or changes beyond control of the company which may occur during the performance of this work. In case of non-payment by the owner, reasonable attorney's fees and costs of collection shall be paid by the owner, whether suit be filled or not. A SERVICE CHARGE OF 1.5%, PER MONTH WILL BE CHARGED ON ALL BALANCES OVER (30) DAYS. THE 1.5% PER MONTH, EQUALS 18 PERCENT PER ANNUM ON THE UNPAID BALANCES.

Any additional damage found while work is being performed will be supplemented by a report as to additional findings and costs.

All repairs performed by others must be re-inspected by Brothers Inspections Services before a CERTIFICATION will be issued. We do not guarantee work completed by others. Any repairs completed by others must be guaranteed in writing and submitted to Brothers Inspections Services before a CERTIFICATION will be issued. This firm does not make statements concerning workmanship. Workmanship is only determinable by those paying for or receiving those services.

If at the time of repairs to decks, the damage is found to be more extensive, a supplemental report will be given along with a bid for any other corrections that may be necessary.

A re-inspection of specific items on the report or of any other conditions pertaining to this structure can be done at an ADDITIONAL COST PER TRIP. The re-inspection must be done within (4) months of the original inspection.

Our inspectors are **not** equipped with 40 ft. ladders therefore all two story buildings will not be inspected at the eaves unless requested.

NOTE: Inspection fee is billed separately above any work costs.

MOLD DISCLAIMER: There may be health related issues associated with the structural repairs reflected in the inspection report referenced by this Work Authorization Contract. These health issues include but are not limited to the possible release of mold spores during the course of repairs. We are not qualified to and do not render any opinion concerning such health issues or any special precautions. Any questions concerning health issues or any special precautions to be taken prior to or during the course of such repairs should be directed to a Certified Industrial Hygienist before any such repairs are undertaken.

NOTE: Work performed by Brothers Inspections Services is guaranteed for a period of one (1) year from the date of completion. Fumigations and whole house treatments are guaranteed for three (3) years from date of completion.

BY EXECUTING THIS WORK AUTHORIZATION CONTRACT, CUSTOMER ACKNOWLEDGES THAT HE OR SHE HAS BEEN ADVISED OF THE FOREGOING AND HAS HAD THE OPPORTUNITY TO CONSULT WITH A QUALIFIED PROFESSIONAL.

BROTHERS INSPECTIONS SERVICES -- License No. PR 7778

Docusign Envelope ID: 07D426A8-D8D2-43AA-A1A2-8909B8E4A602

Brothers Inspections Services

2450 Armstrong Street
Livermore, CA 94551
G.C. #916094

Invoice

Date	Invoice #
3/23/2026	26480

Bill To
Kyle Peacock 1731 Mountain Blvd Oakland, CA 94611

Terms	Project
Due on receipt	1731 Mountain Blvd, Oakland, CA 94611

Quantity	Description	Rate	Amount
	Termite Inspection	385.00	385.00
	Payments/Credits		$0.00
		Balance Due	$385.00

(925) 724-9433 | office@brothersinspections.com | www.BrothersInspections.com